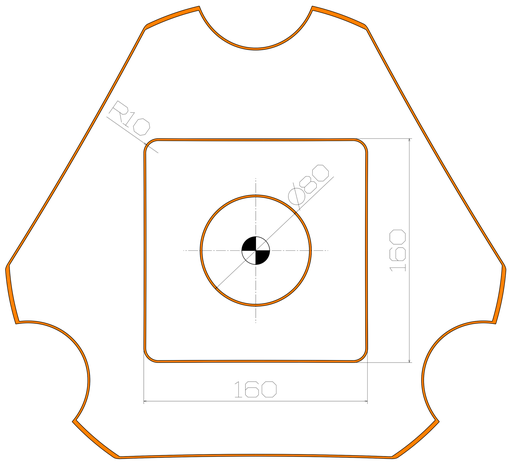

Section cut D–D

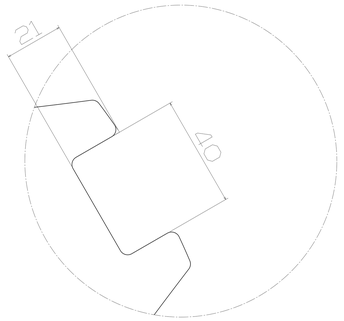

Detail C
Scale: 2:1

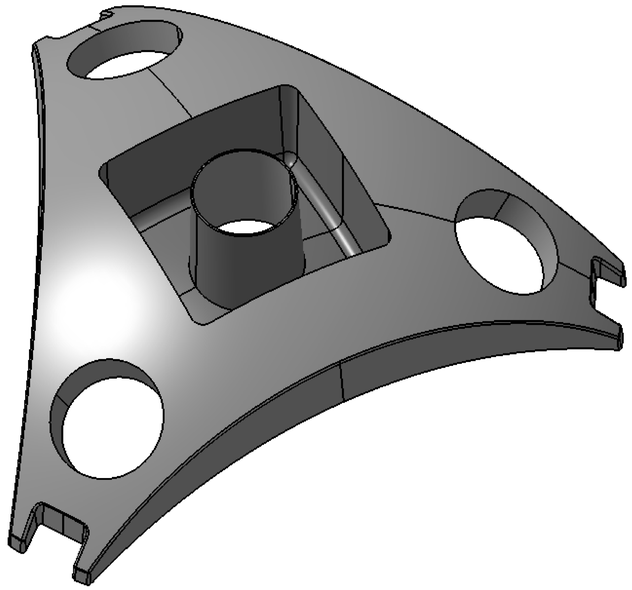

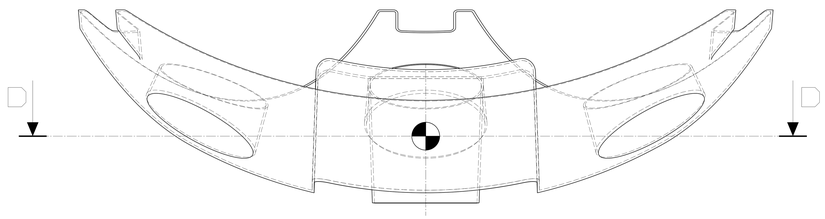

NOTE

Normal Thickness : 1.5t
Normal Draft Angle : 5deg
Unspecified Fillet : 3mm

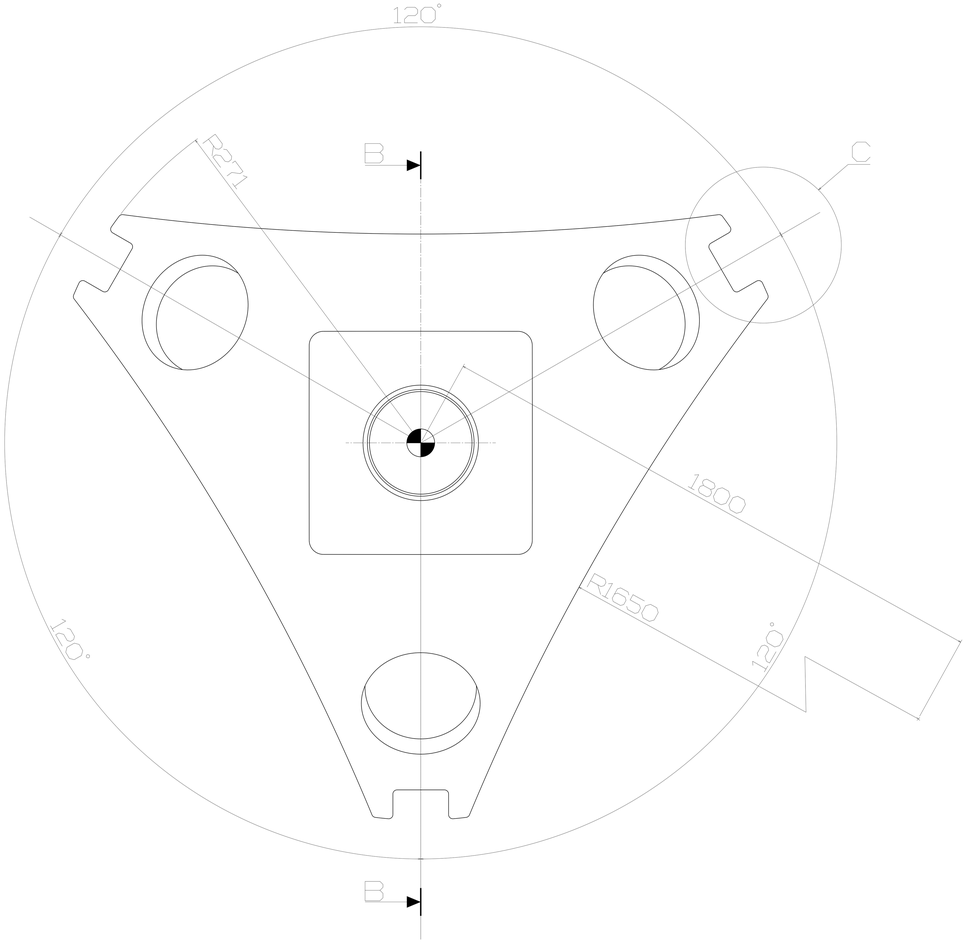

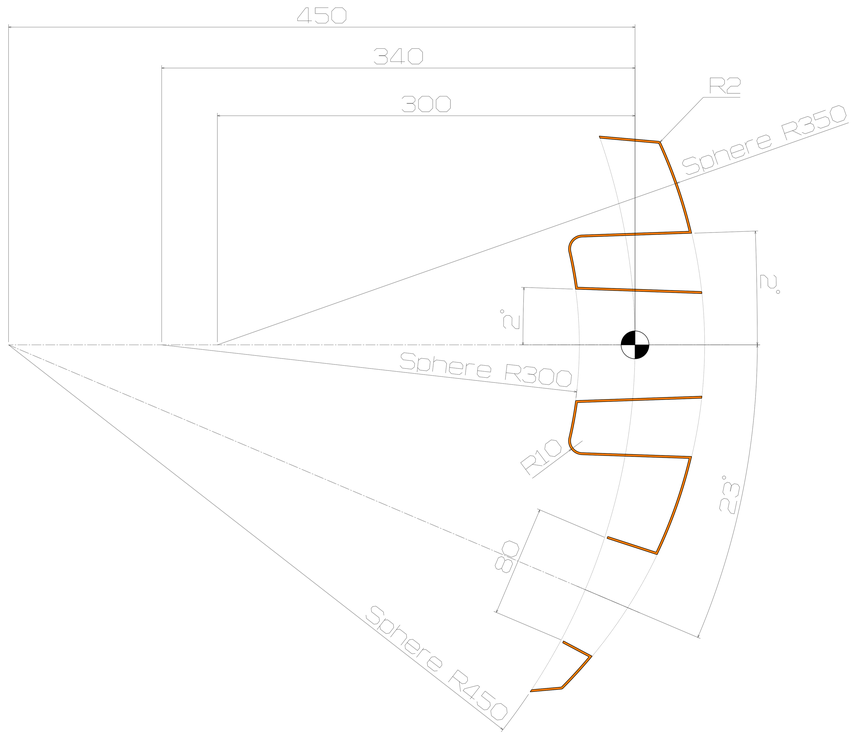

Section cut B–B

www.edu-catia.com